HD-P 177.9

- Rated Line pull 177.9 kN
- Recommended cable 20 mm
- Motor spool directional control valve required
- Standard air shift
- EN 14492-1 Compliant
- Made in the USA

HD-P 177.9 Features

- Spring applied, hydraulic released multi disc brake
- High efficiency planetary gear set
- Foot mount or mid mount
- Fairlead and cable tension optional
- Air operated free spool
- Manual or air operated free spool

Specifications

Rated Line Pull	..... 177.9 kN
Gear Reduction	..... 51.35:1
Weight	..... 337 kgs

LAYER OF CABLE		1	2	3	4	5
*RATED LINE PULL PER LAYER	kN	177.9	149.5	128.5	113.0	100.1
*CABLE CAPACITY	M.	9	19	33	48	65
*LINE SPEED (at 56.7 LPM)	MPM	4.2	5.0	5.7	6.5	7.3

* These specifications are based on recommended wire rope of 20 mm 1960 grade wire rope and a 195 cc motor. Relief valve set at 193 Bar (2,800 psi) which is the rating capacity limited.
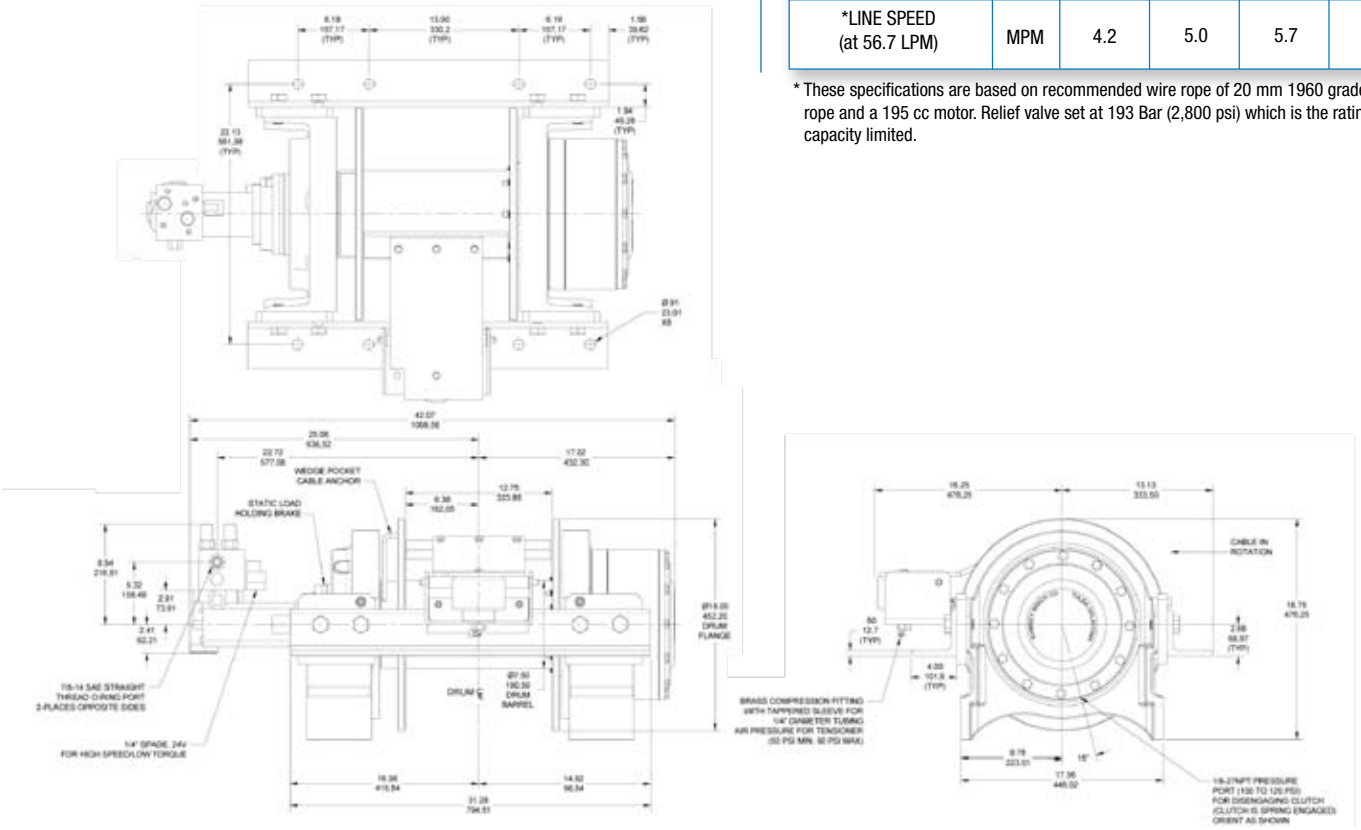
Winch Dimensions